Treadmill, 455Tsbom V02

455T-02

Parts Manual

1/5/2019 4:33:32 AM

LifeFitness
WHAT WE LIVE FOR

Table of Contents

Belt Deck Rollers (After B08).....3
Console Assembly (Before C1002).....5
Drive Motor Assembly.....7
Elevation Assembly.....9
Idler Pulley Assembly.....10
Parts not shown.....11
Upright Assembly.....13
445T/455T Frame Assembly.....14

Belt Deck Rollers (After B08)

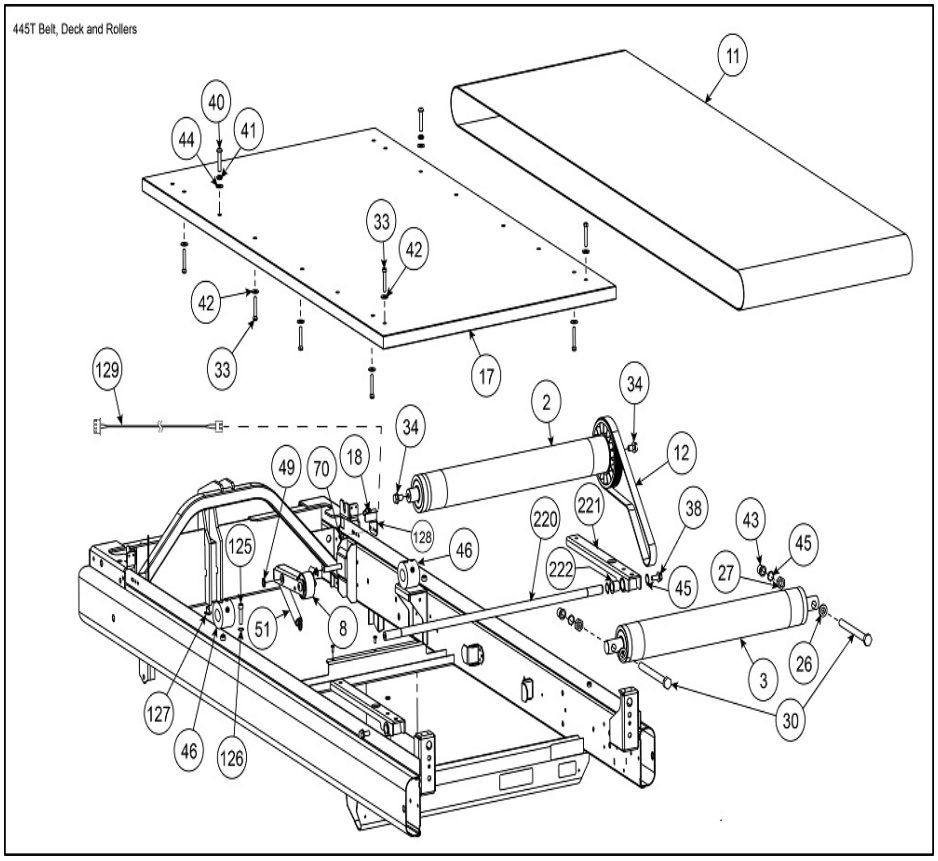

Ref #	Part Number	Qty	Description
2	AL-18945	1	ROLLER,FRONT,TAPERED,445T 455T
3	AL-18946	1	ROLLER,REAR,TAPERED,445T 455T
8	AX-18729	1	ASSY,IDLER BRKT
11	BD-19642	1	BELT,RUNNING,19.88 X 60.00
11	BD-20508	1	BELT,RUNNING,445T IFI,19.88X60
12	BD-18917	1	BELT, POLY-V,320J8
17	DK-20498	1	NLA: DECK,RUNNING,445T IFI,27.5X51.
17	DK-19641	1	NLA: DECK,RUNNING,27.50 X 51.50 X 1
18	EC-18573	1	SPEED SENSOR,THREADED BODY
26	HB-16367	2	BUSHING .50IDX.62ODX.31LG,FLAN
27	HN-10029	2	NUT 1-2-13 HEX STL ZINC
30	HS-00261	2	BOLT,1-2-13X5.5,HXHD
33	HS-16628	2	BOLT,1-4-20X1.5,HXHD,G8
34	HS-16929	2	BOLT WHIZ LCK,3-8-16X.625,HXHD
38	HS-19108	2	SCREW 5-16-18X3-4LG,HXHD,WHIZ-
40	HS-41107	2	BOLT,5-16-18X1.5,BTHD,SST,BLK
41	HW-00165	2	WSHR SPLIT LOCK 5-16 ZINC
42	HW-00180	10	WSHR LOCK SPLIT 1-4,SST,BLK PASSIVATE
43	HW-00590	2	BUSHING,NYLON,1-2 in
44	HW-18123	2	WSHR,.344IDX.75 ODX.125THK,HAR
45	HX-13771	2	RING,RETAIN,5-8" .579 FR.ID
46	HX-19991	2	BUMPER,SPRING DECK,2.10X2.34X1

Ref #	Part Number	Qty	Description
49	HX-19529	1	GRIP RING RETAINING 3/8 in 555
51	HX-19052	1	SPRING, EXTENSION .125 X .75 X
70	HS-11977	1	SCREW SEMS,8-32X.38,PNHD PHIL,EXT,STL,BLK ZN
125	HS-18358	2	BOLT,5-16-18X.1.25,SCHD CAP,BL
126	HW-20044	2	WSHR,BELLEVILLE,15X8.2X1.0MM,.
127	HN-20041	2	NUT,1-4-20 PROPELLER .305 OD
128	AF-18570	1	BRKT,SPEED SENSOR
129	AW-19677	1	CABLE,445T SPEED SENSOR EXT
220	FM-19513	1	SHAFT,DECK PIVOT,425T 445T 455
221	AX-20035	2	ASSY,DECK PIVOT BRACKET
222	HB-18768	1	BEARING,IGUS LF-1011-12

Console Assembly (Before C1002)

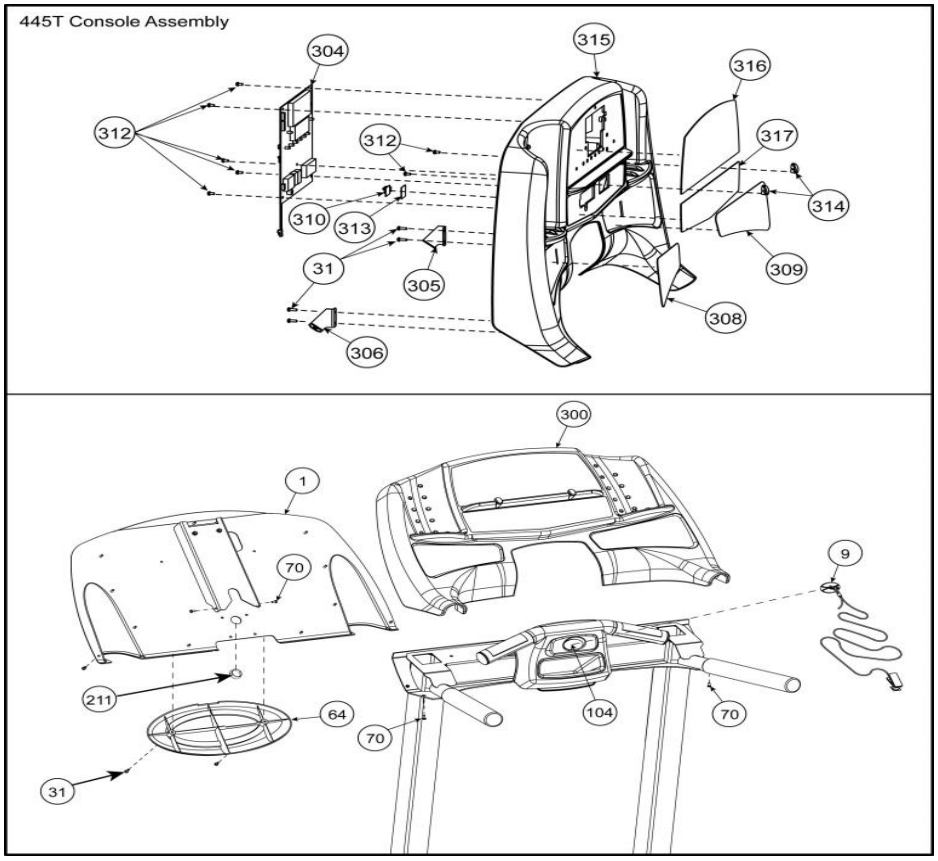

Ref #	Part Number	Qty	Description
1	AF-18899	1	WELDMENT,CONSOLE BACK
9	AX-20944	1	ASSY,E-STOP KEY,MAGNET
31	HS-15706	10	SCREW,8-16X.50,PNHD,STL,BLK ZN CLR,TYP WB
64	PL-19061	1	COVER,CONSOLE,BACK TRIM
70	HS-11977	2	SCREW SEMS,8-32X.38,PNHD PHIL,EXT,STL,BLK ZN
104	DE-20685	1	DECAL,E-STOP,YELLOW
211	HX-18287	1	PLUG,HOLE,PLASTIC 1in,BLACK
300	KAC-20641-4	1	CONSOLE ASSY,445T,ENG
304	AD-19675-Q	1	NC R&R PCA,445T, ROhS
305	AF-19187	1	BRKT,CONSOLE SUPPORT,RIGHT
306	AF-19188	1	BRKT,CONSOLE SUPPORT,LEFT
308	DE-18556	1	Decal, HR Zone
309	DE-18557	1	Decal Program Profiles CUS
310	630A-318	1	SENSOR WIRELESS HR RECEIVER
312	HS-41187	7	SCREW SLFTP,8-16X.3125,PLASTITE
313	HX-17788	1	TAPE,DBL SIDED, .032THK
314	PL-17686	2	TAB,BOOK HOLDER
315	PL-18548	1	PLASTIC,FRONT CONSOLE,425T 445
316	SW-20701-4	1	MEMBRANE,4X5T IFI,TOP
316	SW-21456	1	Keypad TOP 425/445T
317	SW-20700-4	1	MEMBRANE,4X5T IFI,AV,BOTTOM
317	SW-21457-4	1	MEMBRANE,425T 445T,BTM,WO AV,E

Ref #	Part Number	Qty	Description
317	SW-21458-4	1	MEMBRANE,425T 445T,BTM,W AV,EN

Drive Motor Assembly

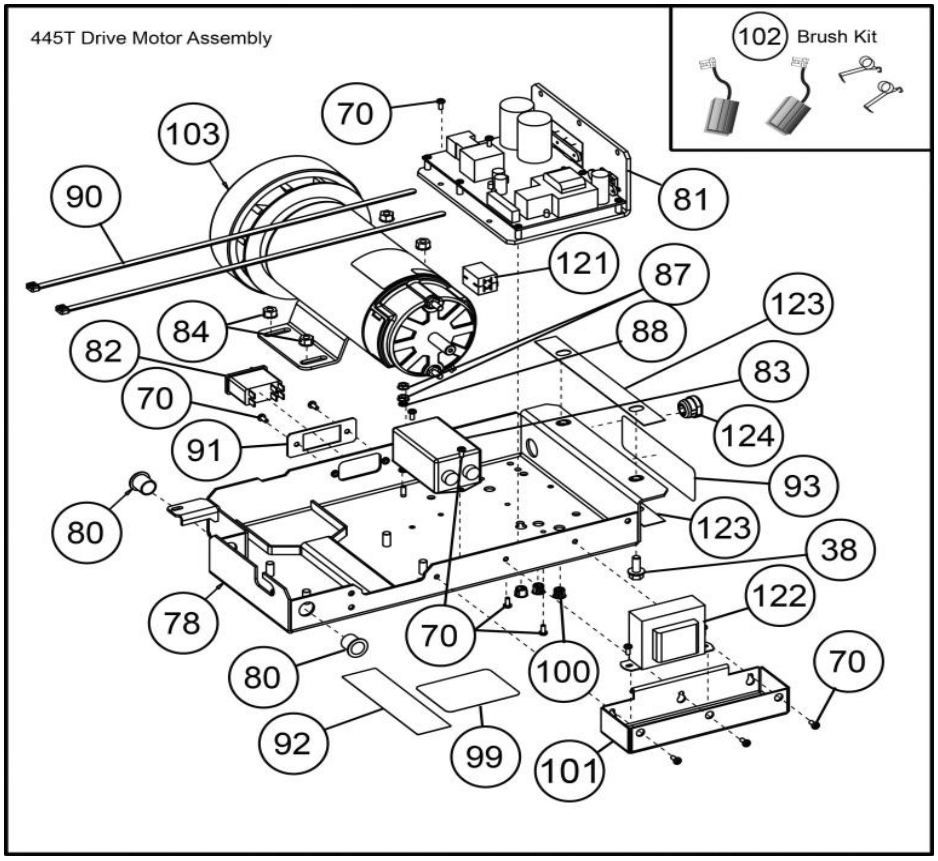

Ref #	Part Number	Qty	Description
38	HS-19108	2	SCREW 5-16-18X3-4LG,HXHD,WHIZ-
70	HS-11977	5	SCREW SEMS,8-32X.38,PNHD PHIL,EXT,STL,BLK ZN
78	AF-18481	1	WELDMENT,MOTOR BASE
80	HB-18768	2	BEARING,IGUS LF-1011-12
81	AD-19085-Q	1	PCA LOWER CONTROLLER 115V 445T
81	AD-19086-Q	1	PCA,LOWER CONTROLLER,230V,445T
82	SW-19667	1	SWITCH,THERMAL CB,20AMP 240V,R
83	EC-19869	1	LINE FILTER,20A,DUAL STAGE
83	EC-18896	1	FILTER,16A
84	HN-11136	4	KEPS 5/16-18 HEX STL ZINC
87	HN-11925	1	KEPS,10-32 HEX STL ZN
88	HW-10856	1	WSHR,LOCK EXT NO10 ZC
90	EH-12260	2	TIE CABLE NYLON 18 INCH
91	FS-19668	1	PLATE,CIRCUIT BREAKER MOUNT
92	DE-20427	1	LABEL,DISCONNECT POWER W RUSSI
93	DE-19238	1	*DECAL,WARNING,MOTOR PLATE,MUL
99	DE-19730	1	Decal, IR Comp Adjust, G
100	HX-17711	2	PLUG,HOLE,PLASTIC 7-16 BLACK bisco #2488
101	AF-19068	1	BRKT,POWER FACTOR,CHOKE
102	SK-18554	1	BRUSH KIT,MCMILLAN 425T 3.0HP
103	AX-19650	1	SUB ASSY,MOTOR,3.OHP 230VDC,MC
103	AX-19649	1	SUB ASSY MOTOR 3.0HP 110VDC MC

Ref #	Part Number	Qty	Description
121	750A-396	1	Ferrite Clamp-on .40 ID
122	TR-19201	1	CHOKE,3.5MH,15AMP,PFC
123	HX-19857	1	STRIP,MOTOR BASE ISOLATION
124	EH-19717	1	BUSHING,STRAIN RELIEF,.425" TH

Elevation Assembly

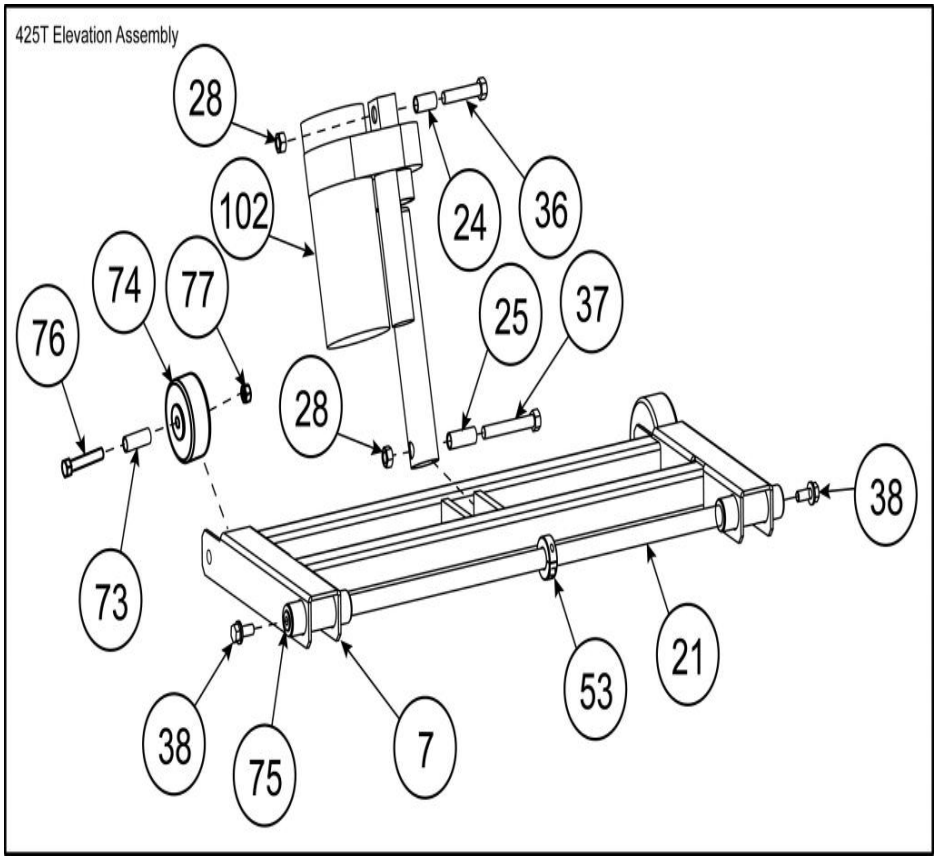

Ref #	Part Number	Qty	Description
7	AF-18394	1	WELDMENT,ELEVATION
21	FM-18405	1	SHAFT,ELEVATION
24	FT-16825	1	SLEEVE,ELEVATION MOUNTING,TOP
25	FT-16826	1	SLEEVE,ELEVATION MOUNTING,BTM
28	HN-17935	1	NUT LOCK,3-8-24,GRD C,STL,ZN
36	HS-17936	1	BOLT,3-8-24X2.0,HXHD CAP,G8,YE
37	HS-17937	1	BOLT,3-8-24X2.75,HXHD CAP,G8,Y
38	HS-19108	2	SCREW 5-16-18X3-4LG,HXHD,WHIZ-
53	HX-19384	1	COUPLING,SHAFT,DBL SPLIT 5-8IN
74	CW-22240	2	WHEEL,80MM DIA X 32MM W
75	HB-18768	2	BEARING,IGUS LF-1011-12
76	HS-60022	2	BOLT,3-8X2.25,HXHD CAP,BLK ZN,
77	HN-60064	2	NUT JAM 3-8IN.-16 BLK ZN
79	HX-22247	2	BUSHING,SPANNER,.500 OD X 1.5i
102	MR-18402	1	MOTOR,ELEVATION,115VAC
102	MR-18403	1	MOTOR,ELEVATION,230VAC

Idler Pulley Assembly

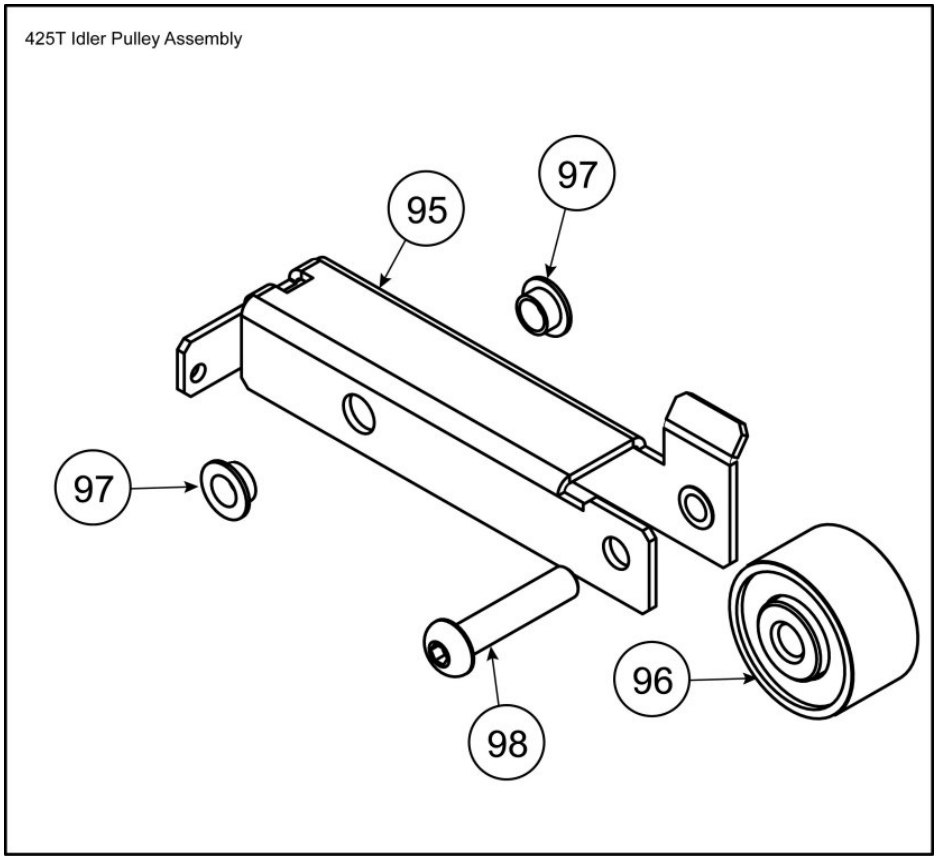

Ref #	Part Number	Qty	Description
95	AF-18728	1	BRKT,IDLER
96	HB-19135	1	IDLER WHEEL,1.88X1.0
97	HB-18056	2	BUSHING,FLANGE, .375X.469X.25
98	HS-19338	1	SCREW,3-8-16X1.75,SCHD BTN, BL

Parts not shown

Other Parts Not Shown

Ref #	Part Number	Qty	Description
NS	LT-20653	1	WARRANTY,455T,PINK
NS	AW-18973	1	CABLE,ELEVATION MOTOR,445T
NS	KEF-21820	1	KIT,FUSE REPLACMENT 550T,115V,
NS	AX-19193-6	1	*ASSY,TV SUPPORT,425T 445T,JAP
NS	FS-18771	1	COVER,LOWER CONTROLLER
NS	AW-19117	1	CABLE,610ARC A-V I-O
NS	AX-19193-4	1	*ASSY,TV SUPPORT,425T 445T,ENG
NS	EF-19632	1	FUSE,15A SLO BLO 1-4X1.1-4 250
NS	AX-19354	1	KIT,INSTALL HARDWARE,425T 445T
NS	AX-19193-2	1	*ASSY,TV SUPPORT,425T 445T,FRE
NS	AW-19716	1	POWER CORD,230V,16A,50HZ
NS	AW-19715	1	POWER CORD,220V,15A,60HZ
NS	FS-19190	1	BRKT,CONTROLLER MOUNT
NS	DE-18413	1	DECAL,ETL AND CSA
NS	AW-19678	1	HARNESS,445T FRAME
NS	AW-18541	1	WIRE,CB TO FILTER,WHITE
NS	AW-18531	1	WIRE,FILTER TO BOARD,WHITE
NS	AF-19068	1	BRKT,POWER FACTOR,CHOKE
NS	AW-22234	1	POWER CORD,13A,250V 445T DANIS
NS	EH-10291	1	TY WRAP BASE
NS	AW-19714	1	POWER CORD,115V,20A,60HZ
NS	AW-19679	1	HARNESS,445T 455T CONSOLE

Ref #	Part Number	Qty	Description
NS	AX-19193-1	1	*ASSY,TV SUPPORT,425T 445T,GER
NS	LT-03051	1	SIGN FACILITY SAFETY
NS	AW-18540	1	WIRE,CB TO FILTER,BLACK
NS	AW-19878	1	POWER CORD,230V,13A,50HZ,396CM
NS	HS-19108	1	SCREW 5-16-18X3-4LG,HXHD,WHIZ-
NS	HX-19059	1	PLUG,TUBE END, 1.5 OD
NS	LT-19340	1	POSTER,ASSY 425T 445T
NS	LT-19801	1	WARRANTY,445T,PINK
NS	AW-18530	1	WIRE,FILTER TO BOARD,BLACK
NS	AX-19193-3	1	*ASSY,TV SUPPORT,425T 445T,SPA
NS	AX-19193-7	1	*ASSY,TV SUPPORT,425T 445T,SWE
NS	AW-18574-Q	1	CABLE,SPEED SENSOR EXT
NS	AW-19221-Q	1	HARNESS,CHR,HANDRAIL
NS	AW-19235	1	WIRE,CONTROLLER GROUND
NS	LT-19800	1	Owner Manual 445T

Upright Assembly

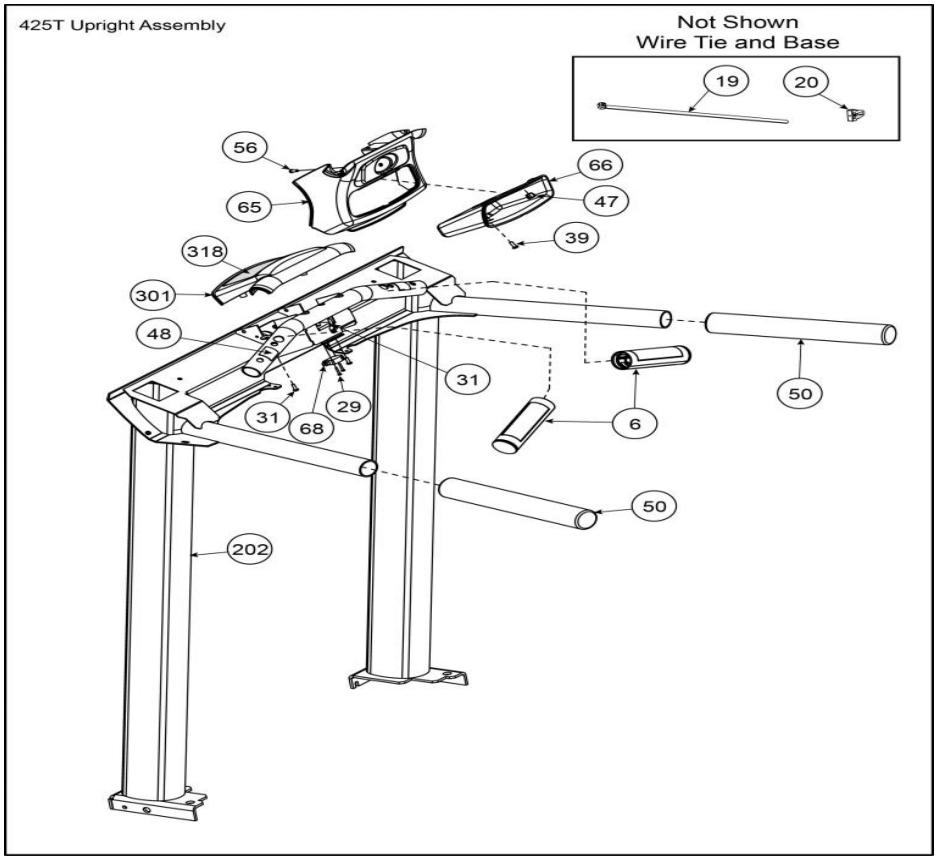

Ref #	Part Number	Qty	Description
6	SK-17827	2	SERVICE KIT,530T HR GRIPS
19	EH-00986	1	TY WRAP,T B TYB-25M 9 in
20	EH-10291	1	TY WRAP BASE
29	HS-00156	2	SCREW,4-40X.62,PNHD PHIL
31	HS-15706	1	SCREW,8-16X.50,PNHD,STL,BLK ZN CLR,TYP WB
39	HS-41006	2	SCREW SLFTP,10-24X.5,PNHD PHIL,410SS,HRDBO,WAX,TT
47	HX-20799	2	PLUG,HOLE,PLASTIC 9-16 BLACK
48	HX-17788	2	TAPE,DBL SIDED, .032THK
50	HX-18901	2	GRIPS,HANDRAIL,425T 445T 455T
56	PL-18773	2	ACTUATOR,E-STOP
65	PL-19093	1	COVER,CHR,BOTTOM
66	PL-19094	1	ACCESSORY TRAY,425T 445T 455T
68	SW-18535	1	SWITCH LIMIT,BUTTON MICROSWITC
202	SCK-18486	1	WELDMENT, UPRIGHT, 425T, CFG
301	AX-19356	1	
318	DE-19189	1	LABEL,WARNING,425T- Custom

445T/455T Frame Assembly

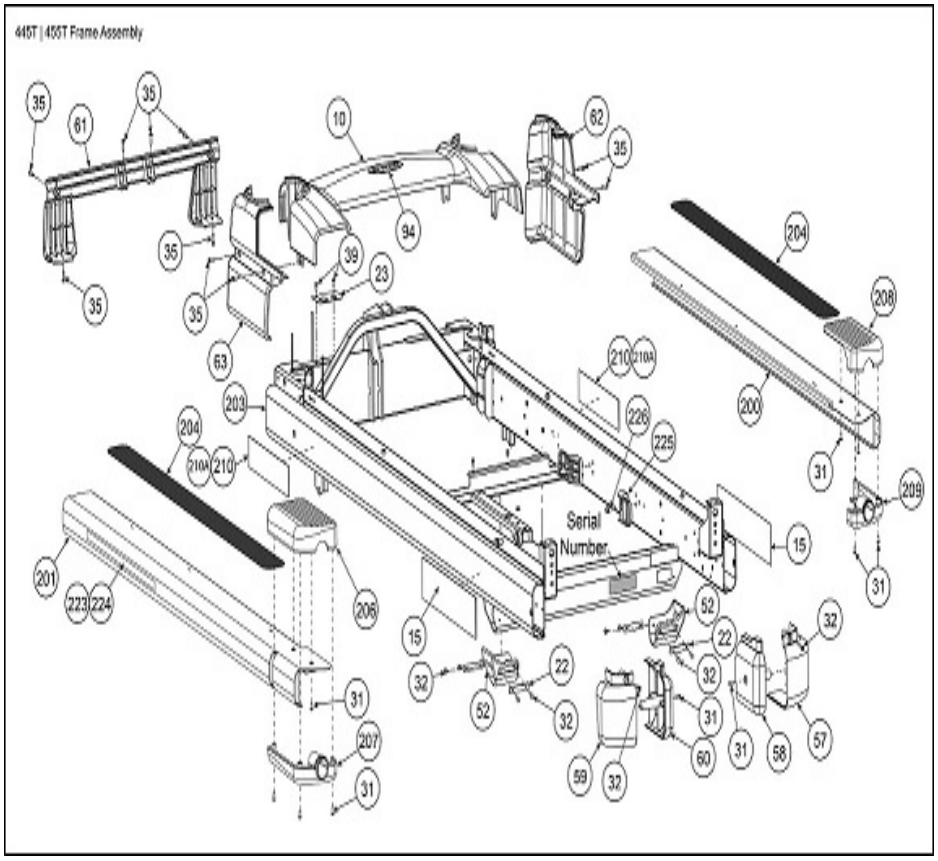

Ref #	Part Number	Qty	Description
10	AX-19239	1	ASSY,MOTOR COVER
15	DE-19360	2	DECAL,CYBEX,BLACK
15	DE-19353	2	DECAL,CYBEX,SILVER
22	FS-16511	2	PLATE,REAR RUBBER FOOT MNT
23	FS-19731	1	PLATE,CABLE CONNECTOR,445T 455
31	HS-15706	12	SCREW,8-16X.50,PNHD,STL,BLK ZN CLR,TYP WB
32	HS-16509	8	SCREW SLFTP,10X.5,PNHD,PLT,TYP
35	HS-16939	6	SCREW SEMS,10-32X.75,PNHD,BLK
39	HS-41006	4	SCREW SLFTP,10-24X.5,PNHD PHIL,410SS,HRDBO,WAX,TT
52	HX-16510	2	FOOT,RUBBER,REAR
57	PL-18929	1	COVER,REAR,OUTER RIGHT
58	PL-18930	1	COVER,REAR,INNER RIGHT
59	PL-18932	1	COVER,REAR,OUTER LEFT
60	PL-18933	1	COVER,REAR,INNER LEFT
61	PL-18990	1	COVER,MOTOR,FRONT
62	PL-18991	1	COVER,MOTOR,RIGHT
63	PL-18992	1	COVER,MOTOR,LEFT
94	DE-19198	1	DECAL,CYBEX LOGO Empire screen
200	SCK-18765	1	KIT, TOP STEP ASSY,RIGHT
201	SCK-18764	1	KIT, TOP STEP ASSY,LEFT
203	AF-20559	1	NLA: WELDMENT,FRAME,445T

Ref #	Part Number	Qty	Description
204	DE-18766	2	DECAL,SAFETY WALK
204	DE-20718	2	DECAL,SAFETY WALK,445T,IFI
206	PL-18931	1	COVER,REAR,TOP LEFT
207	PL-19120	1	COVER,REAR BOTTOM,LEFT
208	PL-18928	1	COVER,REAR,TOP RIGHT
209	PL-19118	1	COVER,REAR BOTTOM,RIGHT
210A	DE-20650	2	DECAL,CX 455T,SILVER
210	DE-19727	2	DECAL,CX 445T,SILVER
210A	DE-20649	2	DECAL,CX 455T,BLACK
210	DE-19726	2	DECAL,CX 445T,BLACK
223	DE-22327	2	LABEL,BLACK,INTELLIGENT SUSPENSION 3
224	DE-22328	2	LABEL,SILVER,INTELLIGENT SUSPENSION 3
225	PL-22129	1	BRKT,POWER CORD STORAGE,PLASTI
226	HS-22137	1	BOLT, 1-4-14x1.25,HXHD WSHR,TY